Pre-Lab 5: Inverting and Non-Inverting Amplifiers

Part 1: Inverting Amplifier

A.

a. Max supply voltage: +/- 22V
b. Max power consumption: 1000 mW
c. Input resistance: $10^{12}\ \Omega$
d. Input offset voltage: 5 mV max
e. Output Resistance: Low Impedance
f. Input offset current: 2 nA max
g. Voltage Gain: 106 dB

B.

a. Pin 1: Balance
b. Pin 2: Inverting input
c. Pin 3: Non-inverting input
d. Pin 4: V-
e. Pin 5: Balance
f. Pin 6: Output
g. Pin 7: V+
h. Pin 8: NC

C. The gain is -3 since it is $-\frac{R_f}{R_i}$, the phase of the output will match the phase of the input exactly since the signal will be multiplied by -3/

D. Since the voltage signal is being connected to the inverting input of the OpAmp. The significance of the resistors is their contribution to computing the gain, which is $-\frac{R_f}{R_i}$

E. You can Create an inverting buffer by connecting the voltage input to the inverting input of the OpAmp and then connecting the non-inverting to the output.

F.

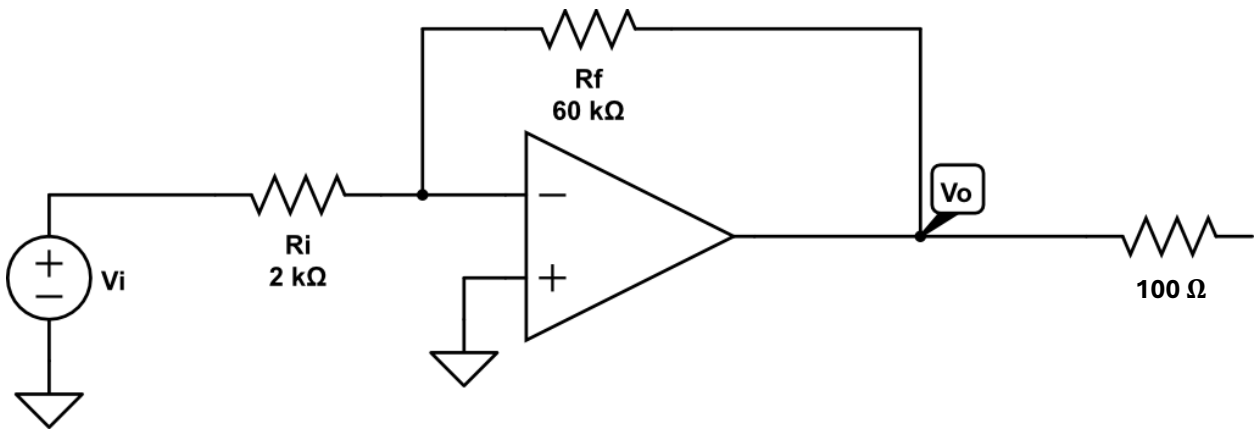

G. Simulation for circuit 5.1

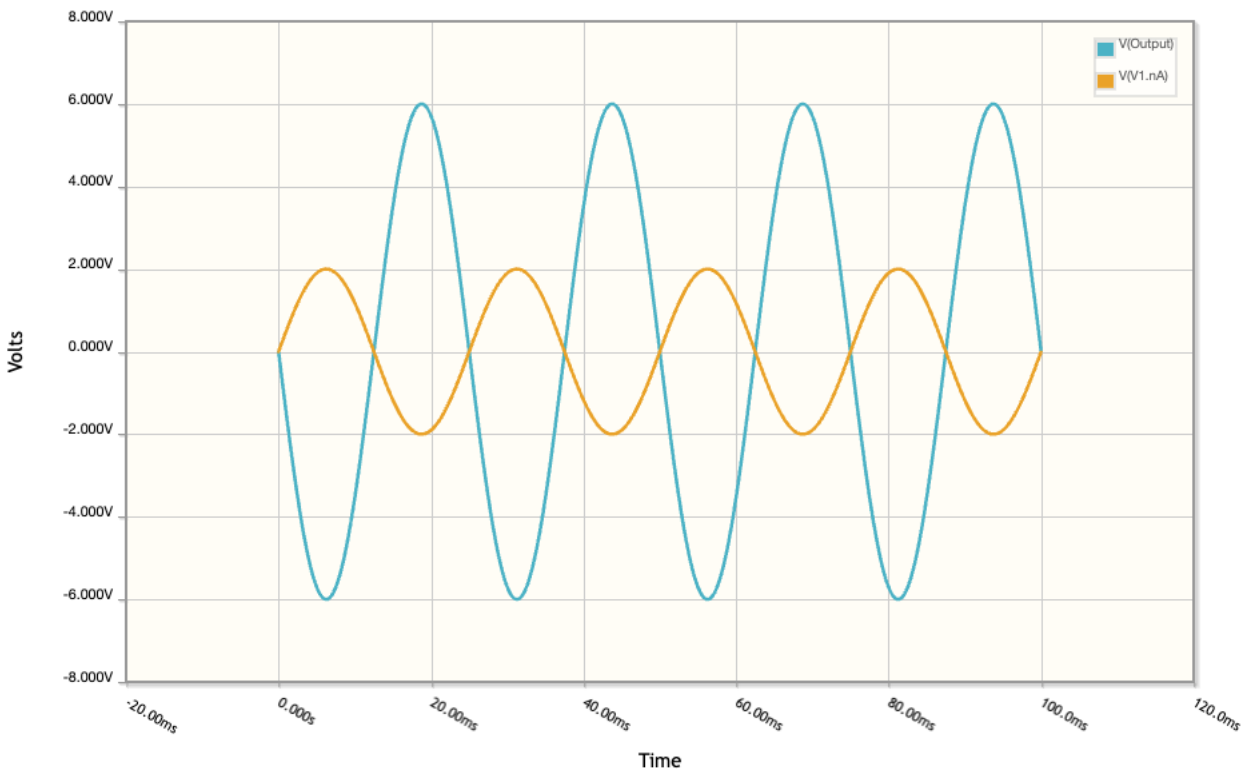

H. As seen above, the orange line is the input, which ends up getting inverted, and multiplied by 3, so it has a gain of -3 due to the inverting amplifier, this output is seen for the blue line.

Part 2: Non-Inverting Amplifier

A. The closed-loop voltage gain of a non-inverting amplifier is $1 + \frac{R_f}{R_i}$ and the phase of the input will be seen on the output signal since the input signal is multiplied by the gain at each point.

B. The circuit is called a non-inverting amplifier because the voltage input signal is connected to the non-inverting input of the OpAmp

C. You can create a voltage follower by shorting the inverting input directly to the output.

D. Circuit

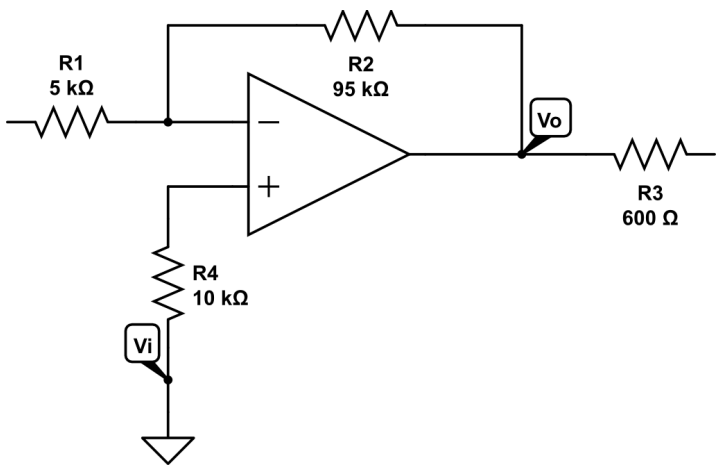

a.

$$R_i + R_f = \frac{10\text{ V}}{0.1\text{ mA}}$$
$$R_i + R_f = 100\text{ k}\Omega$$
$$20 = 1 + \frac{R_f}{R_i}$$
$$R_f = 19R_i$$
$$20R_i = 100\text{ k}\Omega$$
$$R_i = 5\text{ k}\Omega \rightarrow \text{R}_f = 95\text{ k}\Omega$$

E. Simulation

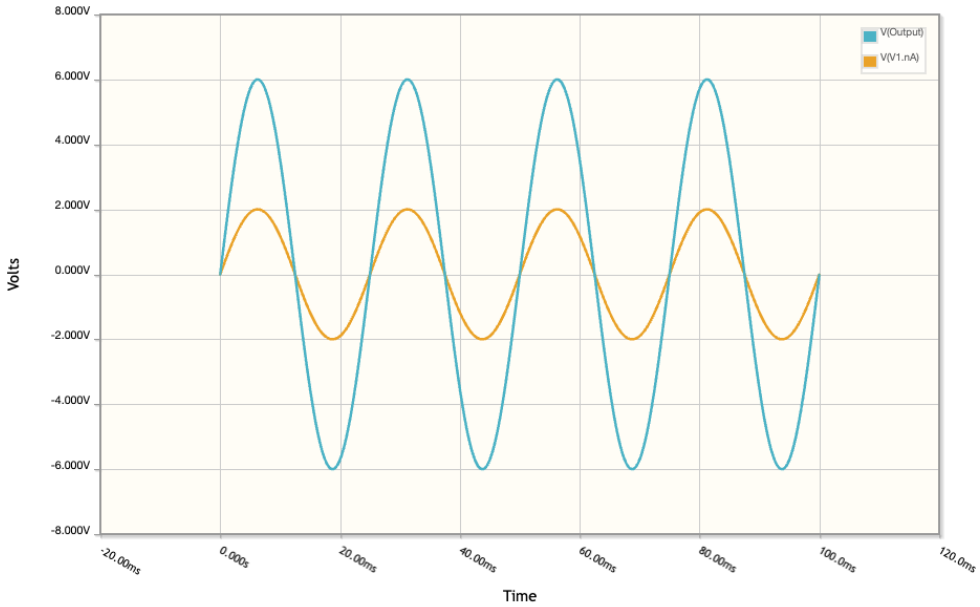

a.

F. Orange is input, and blue is output. The input is scaled by 3.